SAIKOU MICHI CO. S1-S2K-DC3-HF
H-FRAME K&N TYPE INSTALL

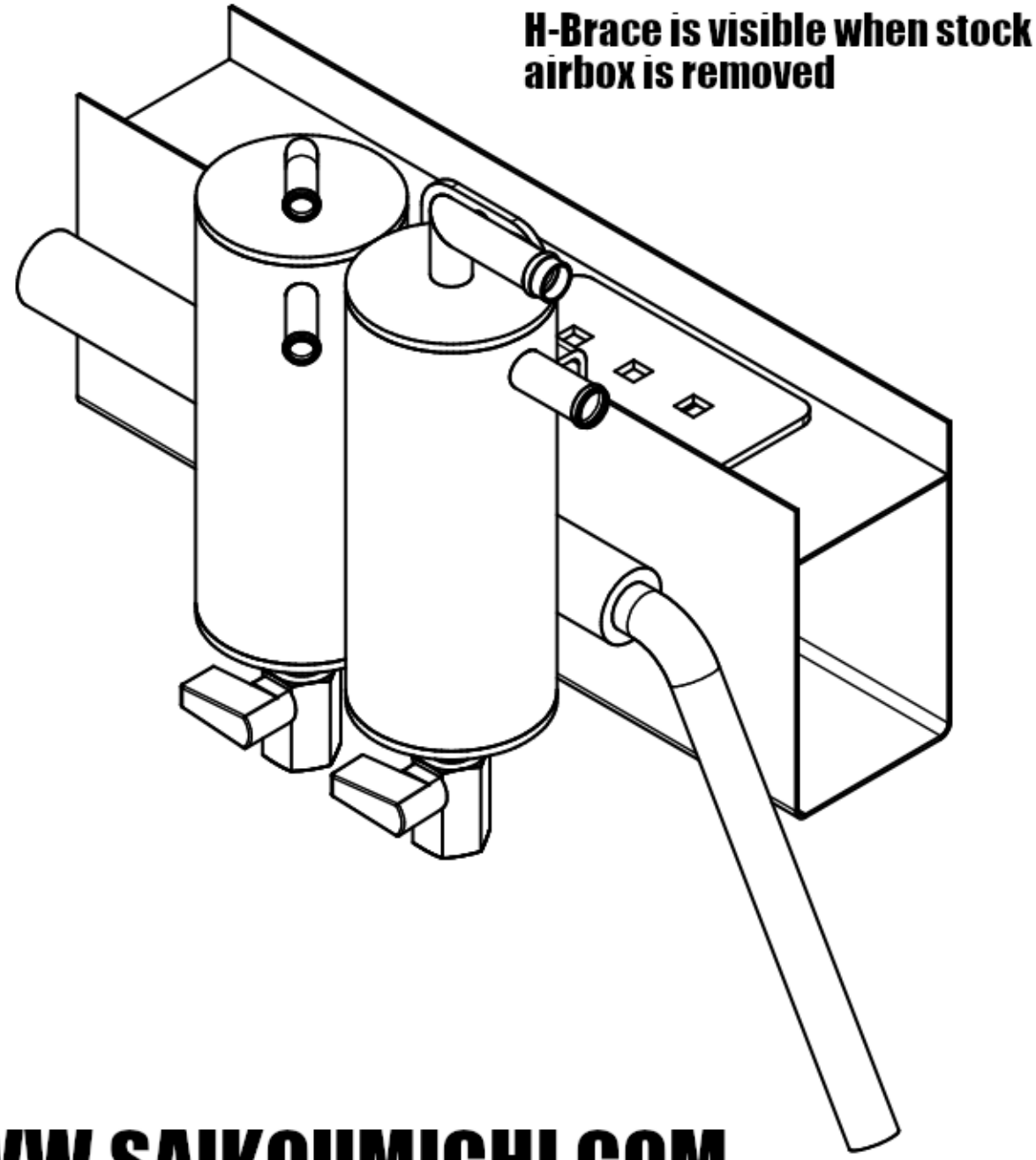

WWW.SAIKOUMICHI.COM